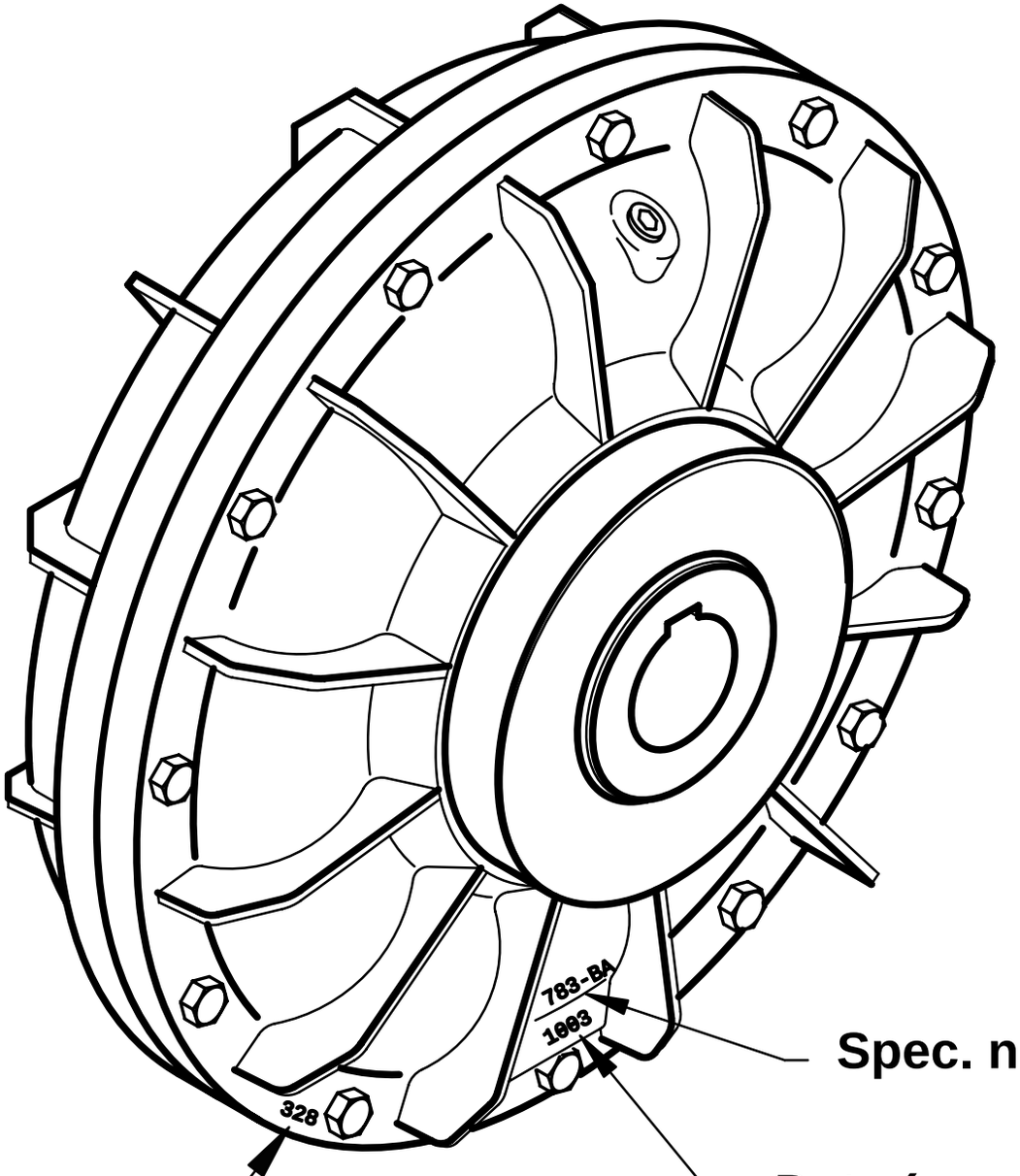

Spec. nr.

Date (month + year)

Production date
(week + year)